EMBASSY SERIES: Decorative Trimless Recessed Cabinet

Door and Trim Construction: These 7/8" formed design cabinet doors are available in # 4 satin stainless steel, US 10 satin bronze, US 3 polished brass, clear anodized aluminum or or white powder coated steel. Doors feature two concealed hinges and concealed handle and roller catch.
Trim Style and Depth: None
Tub: Constructed of cold rolled steel with white powder-coat finish standard.
Unique Options: The 5900 Series is equipped with a shelf 12" from the bottom. Knockouts are located 6" from the bottom and 4 1/4" from the back on both the right- and left-hand sides.
Fire-Rated Option Available: Yes

EMBASSY
5634S21FX

EMBASSY
5654V15

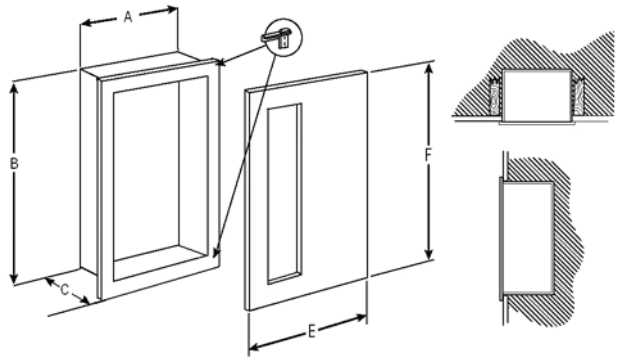

Door Styles

S21 Solid (concealed pull)
V Vertical Duo (concealed pull)
W Vertical Duo with SAF-T-LOK™ and Pull Handle
L22 Solid with SAF-T-LOK™ and Pull Handle

Door Glazing

10 Clear Acrylic
13 Clear Wire Glass
15 Bronze Acrylic
16 Gray Acrylic
17 Clear Tempered Glass
18 Laminated Safety Glass

Options at Additional Cost

Color Painted Door or Tub - Steel Only Vertical or Horizontal Lettering. See Page 21 FIRE-FX
Fire-Rated Tub Option
Futura Embossed "Fire" Handle - Mill or White
Wall Signs and Alarms, See Page 20
Color Anodized Aluminum, See Page 24
Color Anodized Aluminum, See Page 24
#6 Satin, #7 Polished, #8 Mirror Stainless
US9 Polished Bronze Door - Clear Coated
US10B Oil-Rubbed Bronze Door
US4 Satin Brass Door - Clear Coated
Etched Lettering in Glass
Engraved Lettering in Metal

Door Material and Series #					Tub I.D.			Door O.D.*		Wall Opening: Non-Rated			Wall Opening: FX Option			Accommodates Following Extinguishers
Steel	Aluminum	Stainless Steel	Bronze	Brass	A	B	C	E	F	W	H	D	W	H	D	
5614	5624	5634	5644	5654	10 1/2	24	5-3/4	12 3/4 13 3/4 FX	26 1/4 27 1/4 FX	11 1/2	25	6	12 1/2	26 1/8	6 7/8	Cosmic & Galaxy 2.5-10, Mercury 2.5-5, Sentinel 5
5714	5724	5734	5744	5754	16	32	7 3/4	18 1/4 19 1/4 FX	34 1/4 35 1/4 FX	17	33	8	18	34 1/8	8 7/8	Any Cosmic*, Galaxy, Mercury, Saturn or Grenadier P, Sentinel 5-15, 272
Fire Department Valve, Hose & Extinguisher Cabinets																
5514	5524	5534	5544	5554	18	18	7 3/4	20 1/4 21 1/4 FX	20 1/4 21 1/4 FX	19	19	8	20	20 1/8	8 7/8	1-1/2" or 2-1/2" Fire Department Valve Left & Right K.O.'s 9" from top, 4" from back** N/A F.R. Cabinets
5814	5824	5834	--	--	32	32	7 3/4	34 1/4	34 1/4	33	33	8	--	–	--	1-1/2" or 2-1/2" Rack Unit & 2-1/2 " Fire Department Valve or Extinguisher. 2 Left K.O. 4" from back, top & bottom.
5914	5924	5934	5944	5954	16	40	8 3/4	18 1/4 19 1/4 FX	42 1/4 43 1/4 FX	17	41	9	18	42 1/8	9 7/8	2-1/2" Fire Department Valve & Fire Extinguisher Any Cosmic, Galaxy, Mercury, Saturn or Grenadier P, Sentinel 5 & 10
Dimensions in Inches																

*COSMIC & GALAXY 20 EXTINGUISHER MUST BE MOUNTED ON THE BACK OF THE CABINET TUB.
**KNOCKOUTS N/A STAINLESS TUBS
ALL MODELS SHOWN ON THIS PAGE ARE ADAC-COMPLIANT